Straight Male/Female BSP Reducer with Seal - Steel

TrAle®

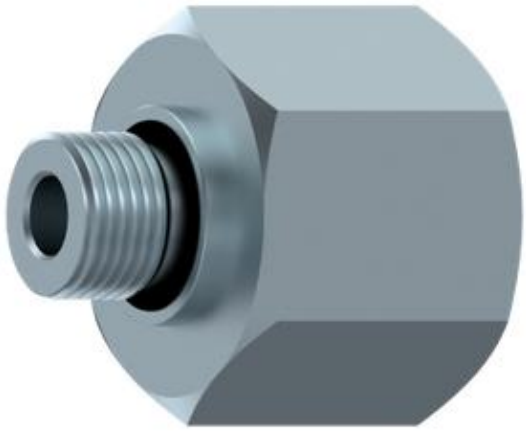

- **Description :** Straight male/female BSP reducer with seal
- **Thread :** BSP parallel (BSPP)
- **Sizes :** Side 1, 1/8" BSP to 1 1/2" BSP / Side 2, 1/8" BSP to 1 1/2" BSP (depending on variant)
- **Material :** Steel

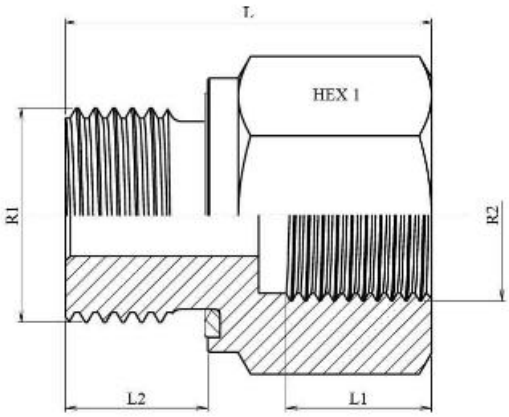

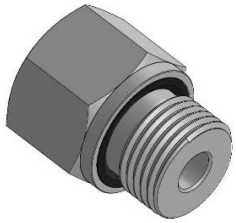

Selection Table : Straight Male/Female BSP Reducer with Seal - Steel

Code SEDIAP	Reference Dicsa	R1	R2	Pression de service (bar)	L	L1	L2	HEX 1
PR#II626	RI-R 1/8 R 1/4WD	1/8"BSP	1/4"BSP	400	30	15	8	19
PR#II627	RI-R 1/8 R 3/8WD	1/8"BSP	3/8"BSP	400	31	15	8	24
PR#II628	RI-R 1/4 R 1/8WD	1/4"BSP	1/8"BSP	400	28	10	12	19
PR#II629	RI-R 1/4 R 3/8WD	1/4"BSP	3/8"BSP	400	36	15	12	24
PR#II630	RI-R 1/4 R 1/2 WD	1/4"BSP	1/2"BSP	400	40	19	12	30
PR#II631	RI-R 1/4 R 3/4 WD	1/4"BSP	3/4"BSP	400	43	22,5	12	36
PR#II632	RI-R 3/8 R 1/8WD	3/8"BSP	1/8"BSP	400	22,5	9	12	22
PR#II633	RI-R 3/8 R 1/4 WD	3/8"BSP	1/4"BSP	400	36	17	12	22
PR#II634	RI-R 3/8 R 1/2WD	3/8"BSP	1/2"BSP	400	41	19	12	30
PR#II635	RI-R 3/8 R 3/4WD	3/8"BSP	3/4"BSP	315	44	19	12	36
PR#II636	RI-R 1/2 R 1/8WD	1/2" BSP	1/8"BSP	400	24	9	14	27
PR#II637	RI-R 1/2 R 1/4WD	1/2" BSP	1/4"BSP	400	24	9	14	27
PR#II638	RI-R 1/2 R 3/8WD	1/2" BSP	3/8"BSP	400	36	15	14	27
PR#II639	RI-R 1/2 R 3/4WD	1/2" BSP	3/4"BSP	315	46	20	14	36

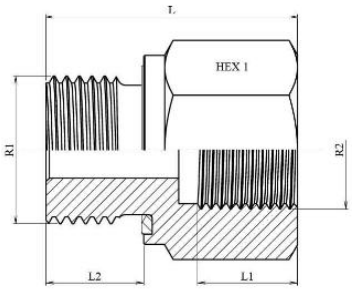

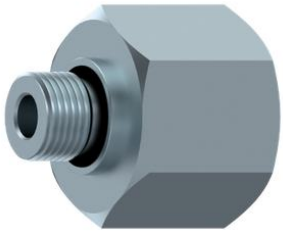

TrAle®

PR#II640	RI-R 1/2 R 1WD	1/2" BSP	1"BSP	315	49	21	14	41
PR#II641	RI-R 1/2 R 1 1/4WD	1/2" BSP	1"1/4 BSP	315	53	25	14	55
PR#II642	RI-R 3/4 R 1/4WD	3/4"BSP	1/4"BSP	315	26	13	16	32
PR#II643	RI-R 3/4 R 3/8WD	3/4"BSP	3/8"BSP	315	26	14	16	32
PR#II644	RI-R 3/4 R 1/2WD	3/4"BSP	1/2"BSP	315	42	18	16	32
PR#II645	RI-R 3/4 R 1WD	3/4"BSP	1"BSP	315	51	20	16	41
PR#II646	RI-R 3/4 R 1 1/4WD	3/4"BSP	1"1/4 BSP	315	55	20	16	55
PR#II647	RI-R 3/4 R 1 1/2WD	3/4"BSP	1"1/2 BSP	250	57	20	16	60
PR#II648	RI-R 1 R 1/4WD	1"BSP	1/4"BSP	315	29	14	19	41
PR#II649	RI-R 1 R 3/8WD	1"BSP	3/8"BSP	315	30	14	19	41
PR#II650	RI-R 1 R 1/2WD	1"BSP	1/2"BSP	315	30	16	19	41
PR#II651	RI-R 1 R 3/4WD	1"BSP	3/4"BSP	315	48	20	19	41
PR#II652	RI-R 1 R 1 1/4WD	1"BSP	1"1/4BSP	315	58	23	19	55
PR#II653	RI-R 1 R 1 1/2WD	1"BSP	1"1/2 BSP	250	60	25	19	60
PR#II654	RI-R 1 1/4 R 1/2WD	1"1/4 BSP	1/2"BSP	315	32	16	20	50
PR#II655	RI-R 1 1/4 R 3/4WD	1"1/4 BSP	3/4"BSP	315	32	18	20	50
PR#II656	RI-R 1 1/4 R 1WD	1"1/4 BSP	1"BSP	315	51	21	20	50
PR#II657	RI-R 1 1/4 R 1 1/2WD	1"1/4 BSP	1"1/2 BSP	250	60	25	20	50
PR#II658	RI-R 1 1/2 R 1/2WD	1"1/2 BSP	1/2"BSP	250	36	16	22	55
PR#II659	RI-R 1 1/2 R 3/4WD	1"1/2 BSP	3/4"BSP	250	36	18	22	55
PR#II660	RI-R 1 1/2 R 1WD	1"1/2 BSP	1" BSP	250	36	20	22	55
PR#II661	RI-R 1 1/2 R 1 1/4WD	1"1/2 BSP	1"1/4 BSP	250	58	26,5	22	55