# Réduction Droite Male/ Femelle BSP avec joint - Acier

TrAle®

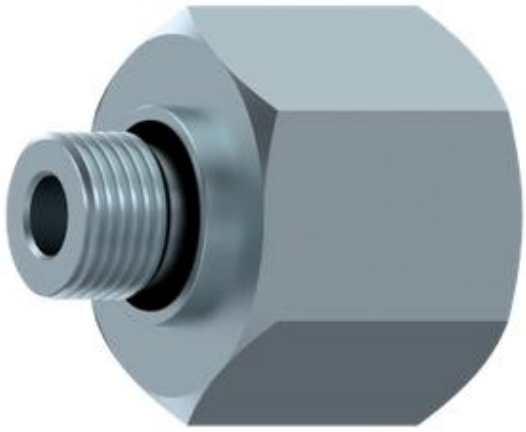

- **Description :** Réduction droite mâle/femelle BSP avec joint
- **Filetage :** BSP parallèle (BSPP)
- **Tailles :** Côté 1, 1/8" BSP à 1 1/2" BSP / Côté 2, 1/8" BSP à 1 1/2" BSP (selon variante)
- **Matière :** Acier

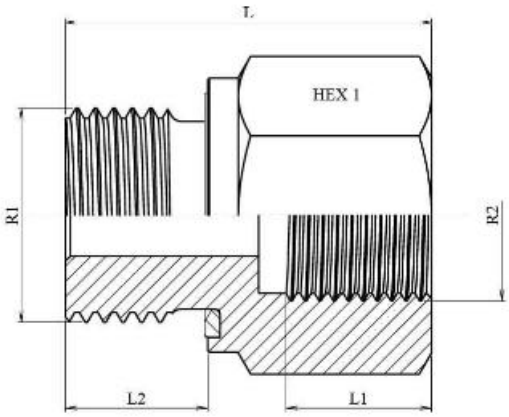


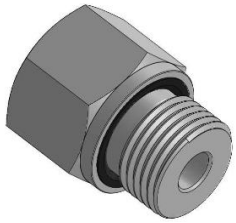

**Tableau de sélection : Réduction Droite Male/Femelle BSP avec joint - Acier**

| Code SEDIAP | Référence Dicsa | R1 | R2 | Pression de service (bar) | L | L1 | L2 | HEX 1 |
|---|---|---|---|---|---|---|---|---|
| PR#II626 | RI-R 1/8 R 1/4WD | 1/8"BSP | 1/4"BSP | 400 | 30 | 15 | 8 | 19 |
| PR#II627 | RI-R 1/8 R 3/8WD | 1/8"BSP | 3/8"BSP | 400 | 31 | 15 | 8 | 24 |
| PR#II628 | RI-R 1/4 R 1/8WD | 1/4"BSP | 1/8"BSP | 400 | 28 | 10 | 12 | 19 |
| PR#II629 | RI-R 1/4 R 3/8WD | 1/4"BSP | 3/8"BSP | 400 | 36 | 15 | 12 | 24 |
| PR#II630 | RI-R 1/4 R 1/2 WD | 1/4"BSP | 1/2"BSP | 400 | 40 | 19 | 12 | 30 |
| PR#II631 | RI-R 1/4 R 3/4 WD | 1/4"BSP | 3/4"BSP | 400 | 43 | 22,5 | 12 | 36 |
| PR#II632 | RI-R 3/8 R 1/8WD | 3/8"BSP | 1/8"BSP | 400 | 22,5 | 9 | 12 | 22 |
| PR#II633 | RI-R 3/8 R 1/4 WD | 3/8"BSP | 1/4"BSP | 400 | 36 | 17 | 12 | 22 |
| PR#II634 | RI-R 3/8 R 1/2WD | 3/8"BSP | 1/2"BSP | 400 | 41 | 19 | 12 | 30 |
| PR#II635 | RI-R 3/8 R 3/4WD | 3/8"BSP | 3/4"BSP | 315 | 44 | 19 | 12 | 36 |
| PR#II636 | RI-R 1/2 R 1/8WD | 1/2" BSP | 1/8"BSP | 400 | 24 | 9 | 14 | 27 |
| PR#II637 | RI-R 1/2 R 1/4WD | 1/2" BSP | 1/4"BSP | 400 | 24 | 9 | 14 | 27 |
| PR#II638 | RI-R 1/2 R 3/8WD | 1/2" BSP | 3/8"BSP | 400 | 36 | 15 | 14 | 27 |
| PR#II639 | RI-R 1/2 R 3/4WD | 1/2" BSP | 3/4"BSP | 315 | 46 | 20 | 14 | 36 |

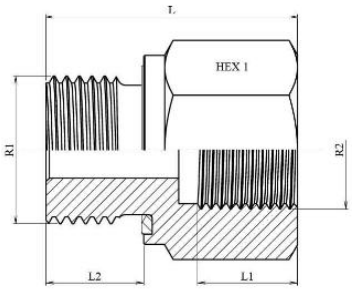


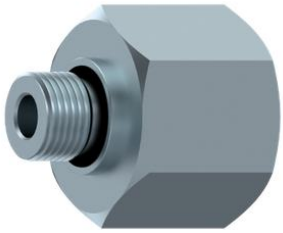

TrAle®

| | | | | | | | | |
|---|---|---|---|---|---|---|---|---|
| PR#II640 | RI-R 1/2 R 1WD | 1/2" BSP | 1"BSP | 315 | 49 | 21 | 14 | 41 |
| PR#II641 | RI-R 1/2 R 1 1/4WD | 1/2" BSP | 1"1/4 BSP | 315 | 53 | 25 | 14 | 55 |
| PR#II642 | RI-R 3/4 R 1/4WD | 3/4"BSP | 1/4"BSP | 315 | 26 | 13 | 16 | 32 |
| PR#II643 | RI-R 3/4 R 3/8WD | 3/4"BSP | 3/8"BSP | 315 | 26 | 14 | 16 | 32 |
| PR#II644 | RI-R 3/4 R 1/2WD | 3/4"BSP | 1/2"BSP | 315 | 42 | 18 | 16 | 32 |
| PR#II645 | RI-R 3/4 R 1WD | 3/4"BSP | 1"BSP | 315 | 51 | 20 | 16 | 41 |
| PR#II646 | RI-R 3/4 R 1 1/4WD | 3/4"BSP | 1"1/4 BSP | 315 | 55 | 20 | 16 | 55 |
| PR#II647 | RI-R 3/4 R 1 1/2WD | 3/4"BSP | 1"1/2 BSP | 250 | 57 | 20 | 16 | 60 |
| PR#II648 | RI-R 1 R 1/4WD | 1"BSP | 1/4"BSP | 315 | 29 | 14 | 19 | 41 |
| PR#II649 | RI-R 1 R 3/8WD | 1"BSP | 3/8"BSP | 315 | 30 | 14 | 19 | 41 |
| PR#II650 | RI-R 1 R 1/2WD | 1"BSP | 1/2"BSP | 315 | 30 | 16 | 19 | 41 |
| PR#II651 | RI-R 1 R 3/4WD | 1"BSP | 3/4"BSP | 315 | 48 | 20 | 19 | 41 |
| PR#II652 | RI-R 1 R 1 1/4WD | 1"BSP | 1"1/4BSP | 315 | 58 | 23 | 19 | 55 |
| PR#II653 | RI-R 1 R 1 1/2WD | 1"BSP | 1"1/2 BSP | 250 | 60 | 25 | 19 | 60 |
| PR#II654 | RI-R 1 1/4 R 1/2WD | 1"1/4 BSP | 1/2"BSP | 315 | 32 | 16 | 20 | 50 |
| PR#II655 | RI-R 1 1/4 R 3/4WD | 1"1/4 BSP | 3/4"BSP | 315 | 32 | 18 | 20 | 50 |
| PR#II656 | RI-R 1 1/4 R 1WD | 1"1/4 BSP | 1"BSP | 315 | 51 | 21 | 20 | 50 |
| PR#II657 | RI-R 1 1/4 R 1 1/2WD | 1"1/4 BSP | 1"1/2 BSP | 250 | 60 | 25 | 20 | 50 |
| PR#II658 | RI-R 1 1/2 R 1/2WD | 1"1/2 BSP | 1/2"BSP | 250 | 36 | 16 | 22 | 55 |
| PR#II659 | RI-R 1 1/2 R 3/4WD | 1"1/2 BSP | 3/4"BSP | 250 | 36 | 18 | 22 | 55 |
| PR#II660 | RI-R 1 1/2 R 1WD | 1"1/2 BSP | 1" BSP | 250 | 36 | 20 | 22 | 55 |
| PR#II661 | RI-R 1 1/2 R 1 1/4WD | 1"1/2 BSP | 1"1/4 BSP | 250 | 58 | 26,5 | 22 | 55 |