Mounting Rail 2m Heavy Series - Untreated Steel



- **Description :** Support/Mounting Rails
- **Series :** DIN 3015 (Heavy Series)
- **Sizes :** 2 m
- **Material :** Zinc/Nickel Coated Steel
- **Brand :** STAUFF

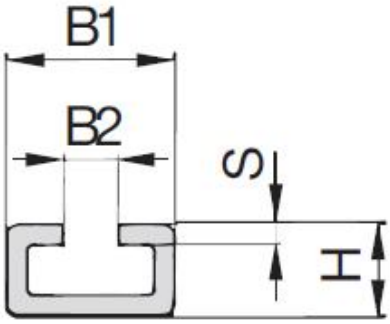

Selection Table : Support / mounting rails 2m – Heavy series - Zinc/Nickel Coated Steel

Code SEDIAP	Reference STAUFF	Group STAUFF	Group DIN	Dimensions (mm/in) B1	B2	H	S
PR#IB155	STSV-2M-W32	3S	1	40	13	22	5
		4S	2				
		5S	3				
		6S	4				