Protection plate Twin Series - Stainless Steel 1.4571 AISI 316 Ti



- **Description :** Protection Plate
- **Series :** DIN 3015 (Twin Series)
- **Sizes :** DIN Group 1 (STAUFF : 1D) to DIN Group 5 (STAUFF : 5D)
- **Material :** Stainless Steel 1.4571 / AISI 316 Ti
- **Brand :** STAUFF

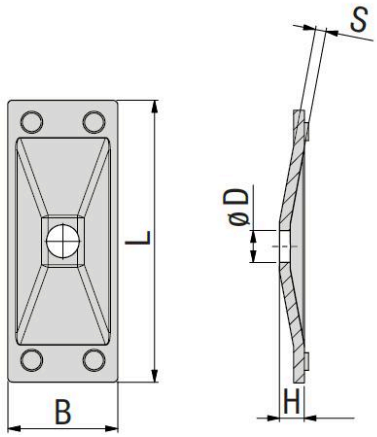

Selection Table : Protection plate – Double series zinc/nickel coated steel

Code SEDIAP	Reference STAUFF	Group STAUFF	Group DIN	Dimensions (mm/in) L	B	H	S	ØD
PR#IC117	GD-1D-W5	1D	1	34	30	7	3	7
PR#IC118	GD-2D-W5	2D	2	52	30	7	3	9
PR#IC119	GD-3D-W5	3D	3	65	30	7	3	9
PR#IC120	GD-4D-W5	4D	4	79	30	7	3	9
PR#IC121	GD-5D-W5	5D	5	102	30	7	3	9