External Gear Pump Alu. - Group 3 - Clockwise - Tapered Shaft 1:8 - BSP Threaded Ports







- **Series :** BTD
- **Group :** 3
- **Rotation :** Clockwise
- **Displacements :** 22 / 26 / 28 / 32 / 36 / 42 / 46 / 50 / 55 cm³/rev
- **Suction port :** BSP female 3/4" or 1" depending on displacement
- **Pressure port :** BSP female 3/4"
- **Maximum pressure :** 200 bar
- **Flange and cover :** Cast iron
- **Brand :** Trale

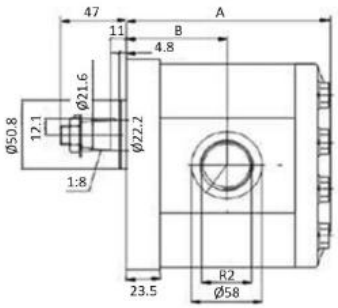

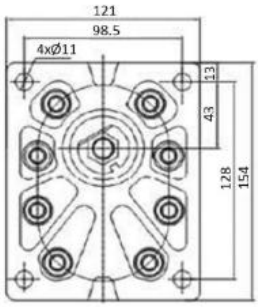

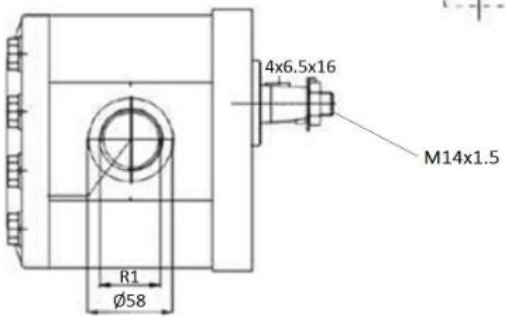

Selection Table : External Gear Pump Alu. - Group 3- Clockwise - Tapered Shaft 1:8 - BSP Threaded Ports

Code SEDIAP	Reference Dicsa	R1	R2	Max. pressure (bar)	Pressure limit (bar)	RPM	cm³/ rev.	A	B
PR#AA167	BTD3220D01	3/4" BSP	3/4" BSP	200	250	3000	22	130,5	63,5
PR#AA168	BTD3260D01	3/4" BSP	3/4" BSP	200	250	3000	26	133,5	65
PR#AA169	BTD3280D01	1" BSP	3/4" BSP	200	250	3000	28	134,5	65,5
PR#AA170	BTD3320D01	1" BSP	3/4" BSP	200	250	3000	32	137,5	67
PR#AA171	BTD3360D01	1" BSP	3/4" BSP	200	250	3000	36	140,5	68,5
PR#AA172	BTD3420D01	1" BSP	3/4" BSP	200	250	2800	42	144,5	70,5
PR#AA173	BTD3460D01	1" BSP	3/4" BSP	200	250	2400	46	147,5	72
PR#AA174	BTD3500D01	1" BSP	3/4" BSP	200	250	2400	50	150	73,5
PR#AA175	BTD3550D01	1" BSP	3/4" BSP	200	250	2400	55	153,5	75