Straight 4-Bolt Flange for Gear Pump, Female BSP – Steel



- **Description :** Straight flange for gear pump connection, featuring a fen BSP threaded port and four-bolt mounting. Available with three differe centre distances to suit various pump configurations. Mounting bolts a ring are included.

- **References :** RPI1M, RPI2M and RPI3AM
- **Centre distances :** 30, 40 and 51 mm
- **Available threads :** 3/8", 1/2" and 3/4" BSP female
- **Included accessories :** 4 mounting bolts and O-ring
- **Brand :** Trale

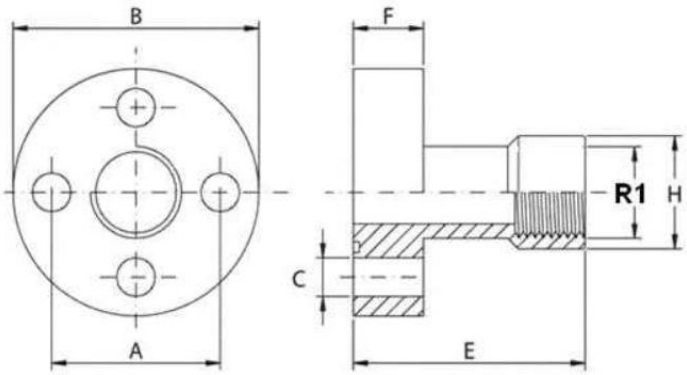

Selection Table : Straight 4-Bolt Flange for Gear Pump, Female BSP – Steel

Code SEDIAP	Reference Dicsa	R1	R2	Center Distance	O'Ring	A	B	C	E	F	H
PR#AC021	RPI1M	3/8" BSP	M6X16* x4 uds	30	18,77 x 1,78	30	45	6,5	55	10	21
PR#AC022	RPI2M	1/2" BSP	M8X20* x4 uds	40	25,12 x 1,78	40	58	8,5	60	12	26,5
PR#AC023	RPI3AM	3/4" BSP	M10X25* x4 uds	51	31,42 x 2,62	51	76	10,5	72	16	33,5