External Gear Pump Aluminium - Group 3 - Clockwise - Tapered Shaft 1:8 - European / Italian Type Flanges







- **Series :** BTD
- **Group :** 3
- **Rotation :** Counterclockwise
- **Displacements :** 22 / 26 / 28 / 34 / 39 / 43 / 46 / 51 / 55 cm³/rev
- **Ports :** European flanges
- **Maximum pressure :** 200 bar
- **Maximum peak pressure :** 250 bar
- **Flange and cover :** Cast iron
- **Brand :** Trale

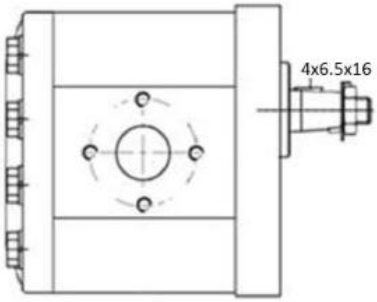

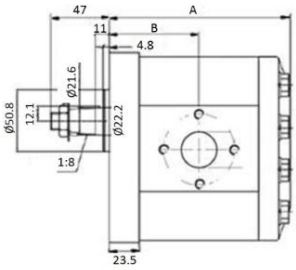

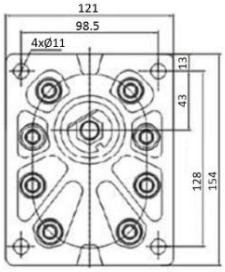

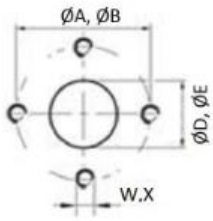

Selection Table : External Gear Pump Aluminium - Group 3 - Clockwise - Tapered Shaft 1:8 - European / Italian Type Flanges

Code SEDIAP	Reference Dicsa	Ø SUCTION (mm)	Ø PRESSURE (mm)	Max. Press. (bar)	Limit press. (bar)	MAX RPM	cm³/ rev.	ØA	ØB	ØD	ØE	A	B
PR#AA154	BTD260I04	40	40	200	250	3000	22 CC	40	40	27	19	128,5	65,5
PR#AA155	BTD280I04	40	40	200	250	3000	26 CC	40	40	27	19	131,5	67
PR#AA156	BTD2120I04	40	40	200	250	3000	28 CC	40	40	27	19	134	68,5
PR#AA157	BTD2140I04	50	40	200	250	3000	34 CC	50	40	27	19	137	69,8
PR#AA158	BTD2160I04	50	40	200	250	3000	39 CC	50	40	27	19	141	71,8
PR#AA159	BTD2200I04	50	40	200	250	2800	43 CC	50	40	27	27	143,5	73
PR#AA160	BTD2230I04	50	40	200	250	2400	46 CC	50	40	27	27	146,5	74
PR#AA161	BTD2250I04	50	40	200	250	2400	51 CC	50	40	27	27	149,5	76
PR#AA162	BTD2280I04	50	40	200	250	2400	55 CC	50	40	27	27	152	78